Real-Time Visitor Counter

A Report Submitted
as Requirements for the Mini Project 1B Course of
Semester IV, AY 2023-2024

Submitted by

Name	Roll No.
Pritika Mediboina	26
Yukita Jaiswal	19
Samiksha Gaonkar	14
Yashvi Jain	18

Supervised by
Hemalata Mote

Department of Electronics & Telecommunication Engineering

Don Bosco Institute of Technology, Kurla India

April, 2025

The Bombay Salesian Society's
Don Bosco Institute of Technology
(Affiliated to the University of Mumbai)
Premier Automobiles Road, Kurla, Mumbai - 400070

Certificate

This is to certify that the Mini project entitled **Real-Time Visitor Counter** is a work of:

Pritika Mediboina (26)
Yukita Jaiswal (19)
Samiksha Goankar (14)
Yashvi Jain (18)

submitted as fulfilment of the requirement for the Mini Project1B of **"Semester IV"** in **"Second Year of Engineering AY 2023-2024"**.

(**Ankur Ganorkar**)	(**Freda Carvalho**)
(**Asst. Prof. Dept of EXTC**)	(**Asst. Prof.Dept of EXTC**)

(**Namita Agarwal**)
(**HOD, Dept. EXTC**)

The Bombay Salesian Society's

Don Bosco Institute of Technology

(Affiliated to the University of Mumbai)
Premier Automobiles Road, Kurla, Mumbai - 400070

Mini Project 1B Report Approval

This Mini project report entitled **'Real-Time Visitor Counter'** by **Pritika Mediboina, Yukita Jaiwal, Samiksha Goankar, Yashvi Jain** is approved for the completion of Mini Project 1B course of Semester IV of AY 2023-2024 in Dept. of Electronics & Telecommunication Engineering.

Examiners

1. _____

2. _____

Date: / /

Place: **Kurla, Mumbai**

Contents

Certificate

1 Introduction **1**

1.1 Project Motivation 1

1.2 Objective 2

1.3 Learning Outcome 2

2 Problem Statement **3**

2.1 Algorithm: 3

2.2 Code 4

3 Results and Conclusion **8**

3.1 Applications 8

3.2 Proteus Simulation 9

3.3 Output 10

List of Figures

3.1 Proteus Simulation 9
3.2 Output at Port 2 observed on Keil uVision Simulator 10

Abstract

This project focuses on developing a Real-Time Visitor Counter using the 8051 microcontroller (AT89C51). Infrared (IR) sensors are used to detect the entry and exit of individuals through a passage. The microcontroller processes this data to maintain an accurate count of visitors, which is displayed on a 16x2 LCD screen. The system provides a simple and cost-effective solution for monitoring foot traffic in locations such as offices, libraries, malls, and classrooms.

Chapter 1

Introduction

1.1 Project Motivation

The Real-Time Visitor Counter is a microcontroller-based system designed to automatically count the number of individuals entering and exiting a particular area. Utilizing the AT89C51 microcontroller and infrared (IR) sensors, the system detects movement through a passage and updates the count accordingly. The visitor count is continuously displayed on a 16x2 LCD screen. This project offers a practical and economical solution for managing foot traffic in environments such as offices, libraries, malls, classrooms, and other public spaces where monitoring occupancy is important.

1.2 Objective

1. To develop an automatic visitor counter using the AT89C51 microcontroller.
2. To detect entry and exit using IR sensors and display the count on an LCD.

1.3 Learning Outcome

1. Understand IR sensor and microcontroller interfacing.
2. Write embedded C code for real-time counting.
3. Build a basic embedded system for people counting.

Chapter 2

Problem Statement

Manual counting is time-consuming and prone to errors. This project provides automatic, hands-free visitor counting.

2.1 Algorithm:

1. Initialize microcontroller, LCD, and IR sensors.
2. Set the visitor count to zero.
3. If Sensor 1 triggers before Sensor 2: increment count (entry).
4. If Sensor 2 triggers before Sensor 1: decrement count (exit).
5. Display count on LCD. Repeat steps 3–5.

2.2 Code

```
ORG 0000H
SJMP START

; ---- Variable Storage ----
TOTAL_COUNT      EQU 30H
TEMP1            EQU 31H
TEMP2            EQU 32H
TEMP3            EQU 33H

; ---- LCD Control Pins ----
RS               BIT P2.0
RW               BIT P2.1
EN               BIT P2.2

; ---- IR Sensor Inputs ----
IR1              BIT P1.0
IR2              BIT P1.1

; -------------------------
; MAIN PROGRAM
; -------------------------
START:
    MOV TOTAL_COUNT, #00

    ; LCD Initialization
    MOV A, #38H
    ACALL LCD_CMD
    ACALL DELAY

    MOV A, #0CH
    ACALL LCD_CMD
    ACALL DELAY

    MOV A, #01H
    ACALL LCD_CMD
    ACALL DELAY
```

```
    MOV A, #06H
    ACALL LCD_CMD
    ACALL DELAY

    ; Show "C:" on Line 1
    MOV A, #80H          ; Line 1 start
    ACALL LCD_CMD
    MOV DPTR, #COUNT_TAG
    MOV R0, #02
    ACALL LCD_PRINT

MAIN_LOOP:
    JB IR1, CHECK_IR2
    ACALL DELAY
    MOV A, TOTAL_COUNT
    INC A
    MOV TOTAL_COUNT, A
    ACALL SHOW_COUNT

CHECK_IR2:
    JB IR2, MAIN_LOOP
    ACALL DELAY
    MOV A, TOTAL_COUNT
    INC A
    MOV TOTAL_COUNT, A
    ACALL SHOW_COUNT
    SJMP MAIN_LOOP

; --------------------------
; LCD CMD
; --------------------------
LCD_CMD:
    MOV P3, A
    CLR RS
    CLR RW
    SETB EN
    ACALL DELAY
    CLR EN
    ACALL DELAY
```

```
    RET

; --------------------------
; LCD DATA
; --------------------------
LCD_DATA:
    MOV P3, A
    SETB RS
    CLR RW
    SETB EN
    ACALL DELAY
    CLR EN
    ACALL DELAY
    RET

; --------------------------
; LCD PRINT STRING
; DPTR -> Address of String
; R0 = length
; --------------------------
LCD_PRINT:
    CLR A
PRINT_LOOP:
    MOVC A, @A+DPTR
    ACALL LCD_DATA
    INC DPTR
    DJNZ R0, PRINT_LOOP
    RET

; --------------------------
; SHOW COMBINED COUNT on Line 1
; --------------------------
SHOW_COUNT:
    MOV A, TOTAL_COUNT
    MOV TEMP1, A
    MOV B, #10
    DIV AB
```

```
    MOV TEMP2, A
    MOV TEMP3, B

    MOV A, #82H         ; After "C:" on line 1
    ACALL LCD_CMD
    MOV A, TEMP2
    ADD A, #30H
    ACALL LCD_DATA
    MOV A, TEMP3
    ADD A, #30H
    ACALL LCD_DATA
    RET

; --------------------------
; DELAY
; --------------------------
DELAY:
    MOV R2, #50
DL2: MOV R1, #255
DL1: DJNZ R1, DL1
     DJNZ R2, DL2
     RET

; --------------------------
; LCD STRINGS
; --------------------------
COUNT_TAG:  DB "C:"

END
```

Figure 2.2: Assembly language code for real time visitor counting

Chapter 3

Results and Conclusion

3.1 Applications

- Offices and Institutions: Monitor occupancy and control visitor flow.
- Libraries and Classrooms: Manage space usage and automate attendance.
- Retail Stores and Malls: Analyze footfall for staffing and marketing decisions.
- Event Venues: Ensure safety by tracking crowd size.
- Hospitals: Monitor people in waiting areas or sensitive zones.
- Smart Buildings: Automate lighting, HVAC, or security based on occupancy.

3.2 Proteus Simulation

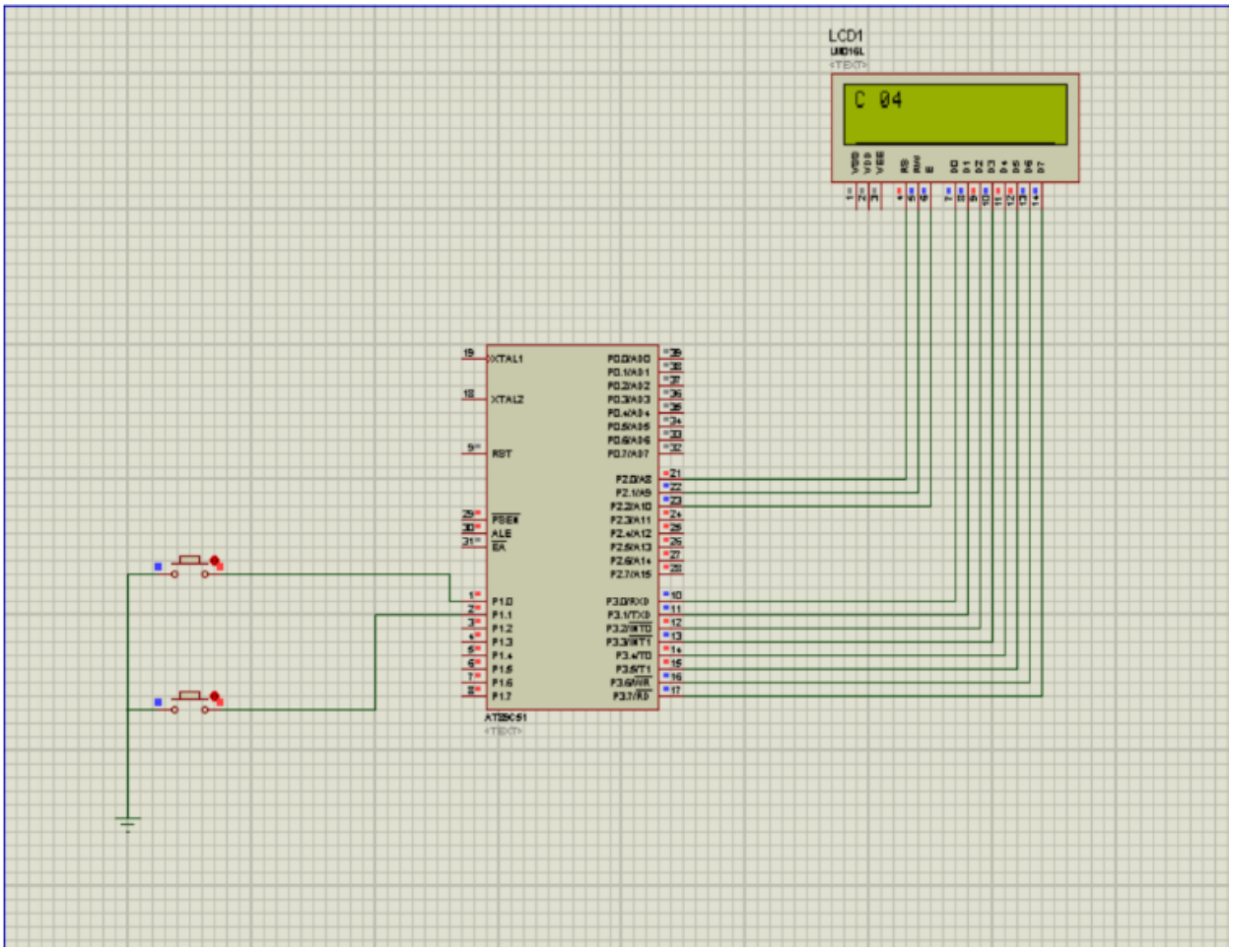

Figure 3.1: Proteus Simulation

3.3 Output

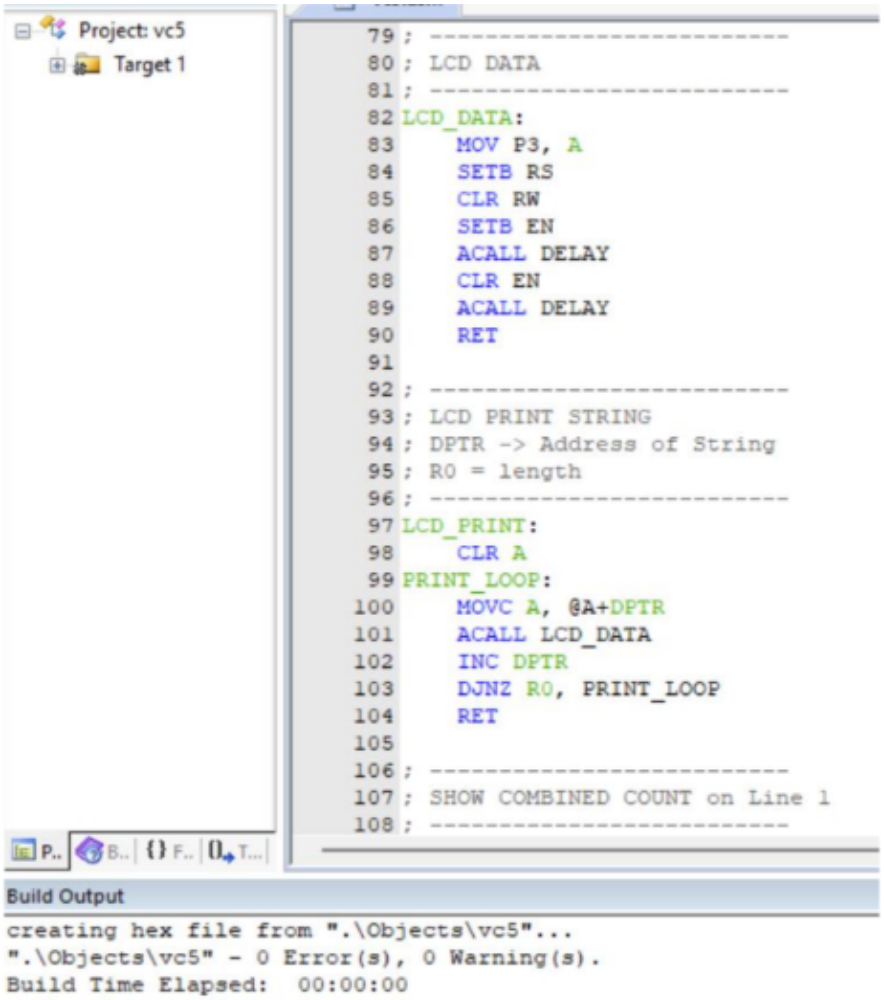

Figure 3.2: Output at Port 2 observed on Keil uVision Simulator